FRAME	KW
MS90L2-2	3
MS90L2-4	2.2
EMS90L2-2	3

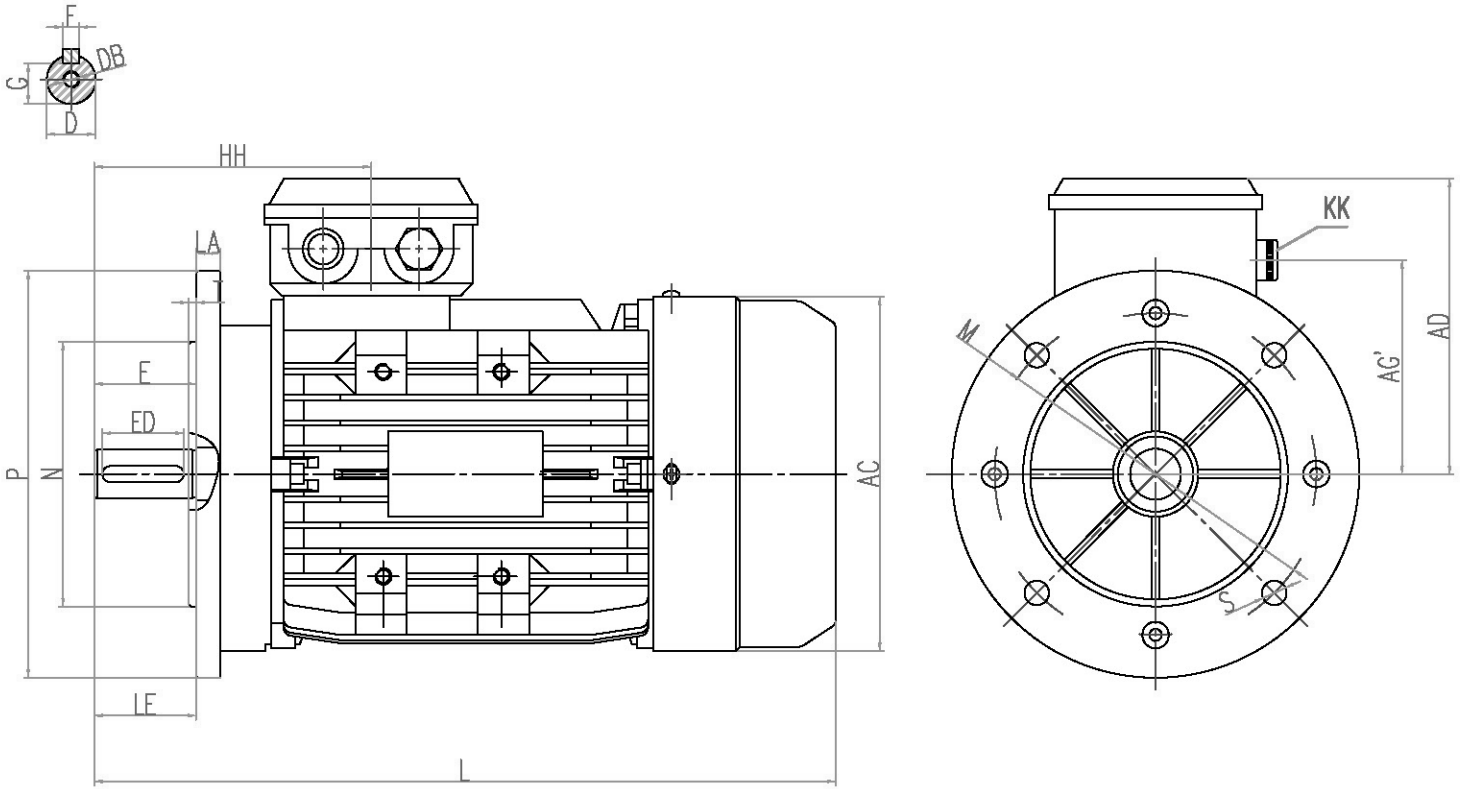

CLIENT:		
FRAME	90L2	KW
VOLTS		RPM

OUTLINE DIMENSIONS FLANGE MOUNTED MOTORS

AC	AD	AG'	KK	L	LA	HH	LE	M	N	P	S	T
ϕ185	145	110	1-M20X1.5	365	12	133	50	ϕ165	ϕ130	ϕ200	4-ϕ12	3.5

SHAFT EXT.DE ONLY

D	DB	E	ED	F	G
ϕ24	M8×20	50	40	8	20

CUSTOMER APPROVAL _____ _____

SIGNATURE DATE

90L2 V1/B5

DIMEMSION OUTLINE

ELECTRAMO®

DATE				CHECKED BY	
DESIGBED BY				APPROVED BY	
ISSUE		DATE		CERTIFIED BY	
ISSUE		DATE		CERTIFIED BY	
ISSUE		DATE		CERTIFIED BY	
ISSUE		DATE		CERTIFIED BY	