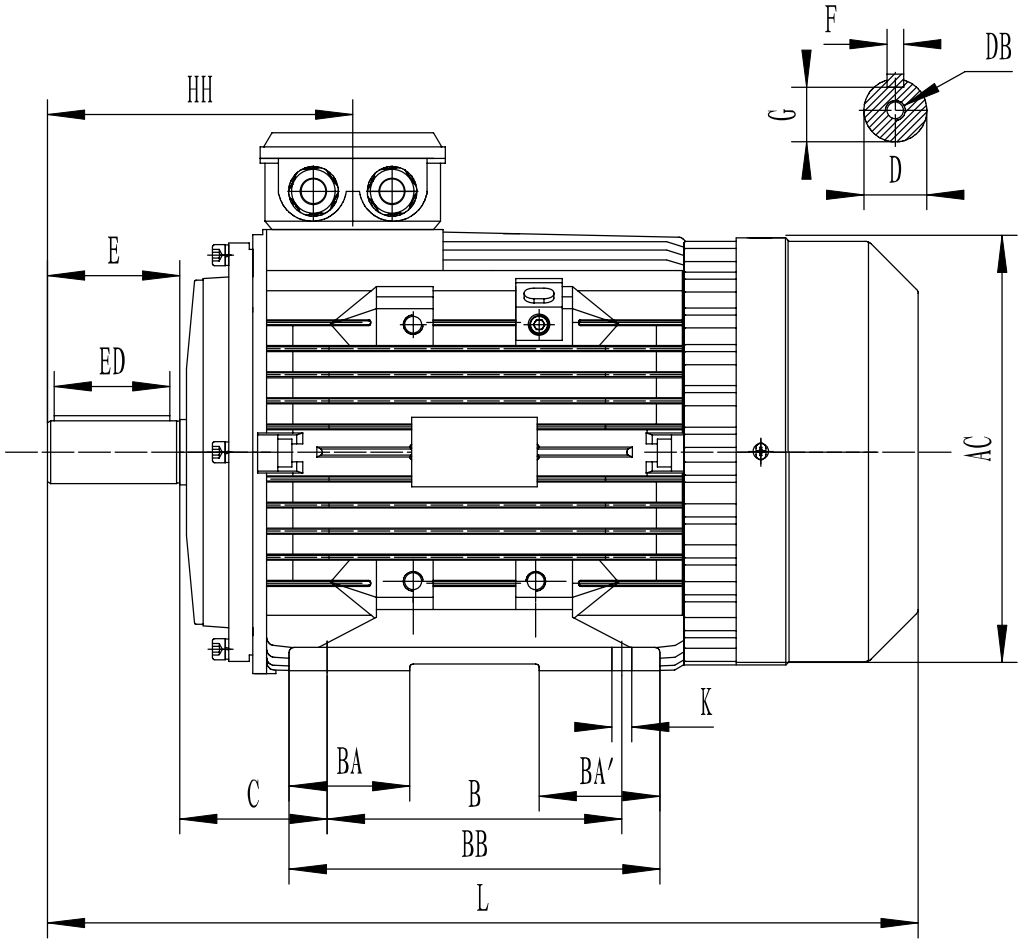

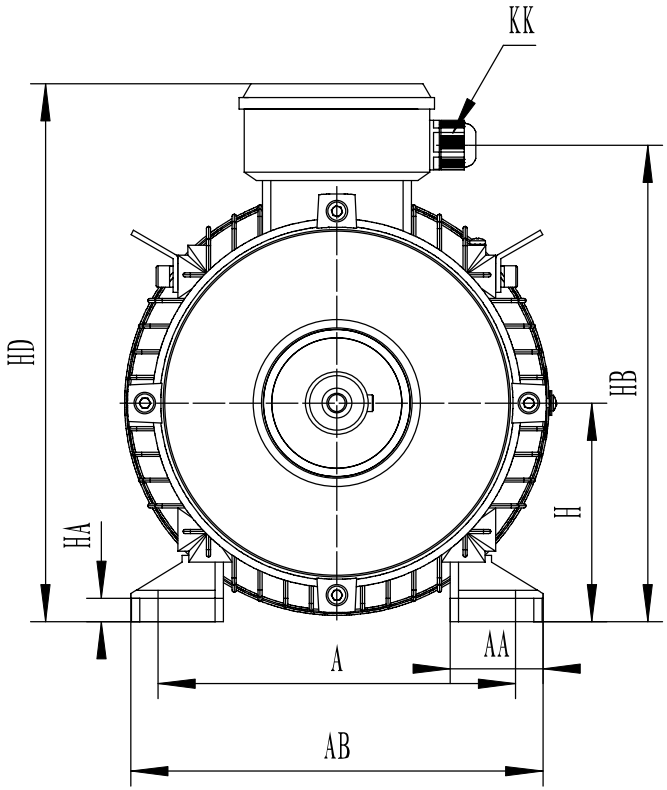

CLIENT:		
	KW	RPM
FRAME 132LJ		
VOLTS		

FRAME	KW
HMS132LJ-4	7.5

FOOT-OR-FLANGE-MOUNTING																					SHAFT EXT.DE ONLY						WEIGHT(kg)									
A	AA	AB	AC	B	BA	BA"	BB	C	H	HA	HB	HD	HH	K	KK	L					D	DB	E	ED	F	G										
216	36	252	270	178	51	51	212	89	132	14	291.5	325	184.5	12X16	2-M25X1.5	525					38	M12X28	80	70	10	33										

CUSTOMER APPROVAL

SIGNATURE

DATE

HMS132LJ B3	DATE			CHECKED BY	
	DESIGNED BY			APPROVED BY	
DIMENSION OUTLINE	ISSUE		DATE	CERTIFIED BY	
	ISSUE		DATE	CERTIFIED BY	
DWG #	ISSUE		DATE	CERTIFIED BY	
	ISSUE		DATE	CERTIFIED BY	